NOVA Series

NOVA 15-50-B8 P30 WK

Inrunner BLDC motor with closed housing

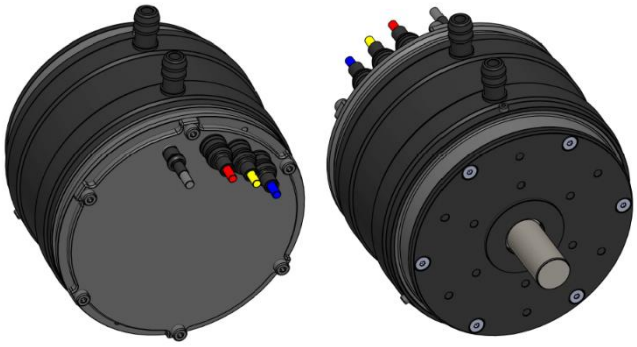

Overview

The NOVA 15 Water-Cooled ("WK") is from our family of super rugged inrunner BLDC motors and has been specifically designed for the most demanding applications.

Features

- Super robust housing for mission critical applications
- Best power-to-weight-to-robustness ratio in its class
- Position and temperature sensors included in standard

Specifications

Peak output power	15	kW
Peak torque[1]	40	Nm
Max. speed	8,000	rpm
Voltage range	30-160	V
Speed constant (kV)	48	rpm/V
Diameter (ex. water inlet)	131	mm
Length	97	mm
Weight	3,200	g
Phase cable length	100	mm
Sensor cable length	400	mm
Protection class	IP54	
Mounting	Front & back	
Cooling	Water cooled	
Ambient Temperature range	-20 to +60	°C
Max. temperature of stator (as measured by sensor)	+100	°C
Position sensor types	Hall effect sensor with UVW-commutation signals	
Temperature sensor	NTC 47 kΩ	
Number of poles	30	
Number of windings	8	
Recommendations for water cooling	Flow of 7 liters-per-minute at max. 40°C inlet temp.; coolant pressure shall not exceed 2 bar/ 29 PSI.	

Complementary Products

- Plettenberg ESCs: MST 60-260, MST 60-290, MST 60-130, MST 80-240, MST 80-350, MST 140-200
- Plettenberg gold connectors: GC6-00 / GC6-90

Heatmap

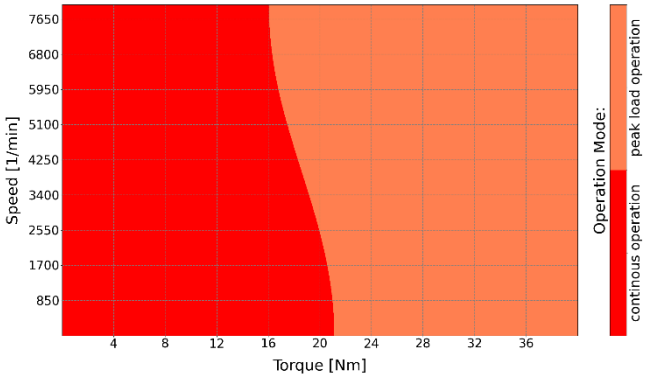

Notes:
[1] With sensor-guided ESC

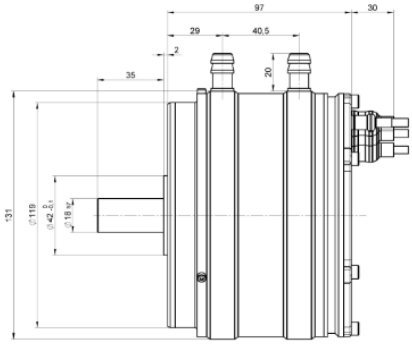

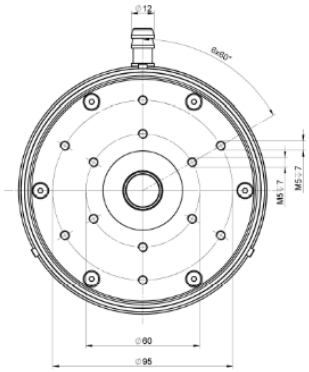

Plettenberg Elektromotoren GmbH & Co. KG
Rostocker Straße 30
34225 Baunatal, Germany
T: +49 (0) 56 01 97 96-0
www.plettenbergmotors.com / sales@plettenbergmotors.com
© 2024 Plettenberg Elektromotoren GmbH & Co. KG. All rights reserved.